Elastimold® Fused Elbows combine the advantages of Full-Range Current-Limiting Fusing with the convenience of 15/25kV hot stick operable, loadbreak elbow switching.

This is the fastest, most cost effective way to improve the distribution system's reliability without adding a separate piece of switchgear or replacing existing sectionalizing cabinets. Simply replace existing 200 Amp tap elbows with Elastimold® Fused Elbows to protect light duty underground distribution systems including sub-loops, and radial taps.

FEATURE	BENEFIT/DESCRIPTION
EPDM Molded Rubber Deadfront Construction	Fully sealed and submersible Insulate, shield and eliminate exposed live parts
Split Center Section	Easy fuse replacement
Built-in Voltage test points or direct test ports	Quick and convenient blown fuse indication
Full-range current-limiting fusing with 50kA interrupting capability Rated 5kV Ungrounded to 25kV Grounded Wye 15/25kV hot stick operable, loadbreak elbow switching	Facilitates fusing of light duty underground distribution systems including sub-loops, radial taps, junctions, transformers, and other equipment

CERTIFIED TESTS & PERFORMANCE

Elastimold® fused elbows have been designed and tested per applicable portions of IEEE, ANSI, and other industry standards including:

ANSI C37.40 Standard for Current-Limiting Fuse Service Conditions.

ANSI C37.41 Standard for Current-Limiting Fuse Design & Testing.

ANSI C37.47 Standard for Current-Limiting Fuse Ratings & Specifications.

IEEE 386 Standard for Separable Connectors.

RATINGS

System Voltage Class (kV)	15	25	25/28*
Nominal Fuse Voltage (kV)	8.3	15.5	17.2
Rated Maximum Fuse Voltage (kV)	10	15.5	17.2
Frequency (Hz)	50/60	50/60	50/60
BIL Impulse Withstand (kV)	95	125	140
One Minute AC Withstand (kV)	34	40	45
Fifteen Minute DC Withstand (kV)	53	78	78
Corona Extinction (kV)	11	19	21.5
Symmetrical Interrupting Capability (Amp)	50,000	50,000	50,000
Current Rating (Amp)	6-80	6-20	6-45

APPLICATION INFORMATION

Construction: Submersible, non-venting, deadfront, corrosion resistant.

Ambient Temperature Range: – 30 to +65 degrees centigrade.

* The 28kV rated fuse requires at least 75% grounded load.

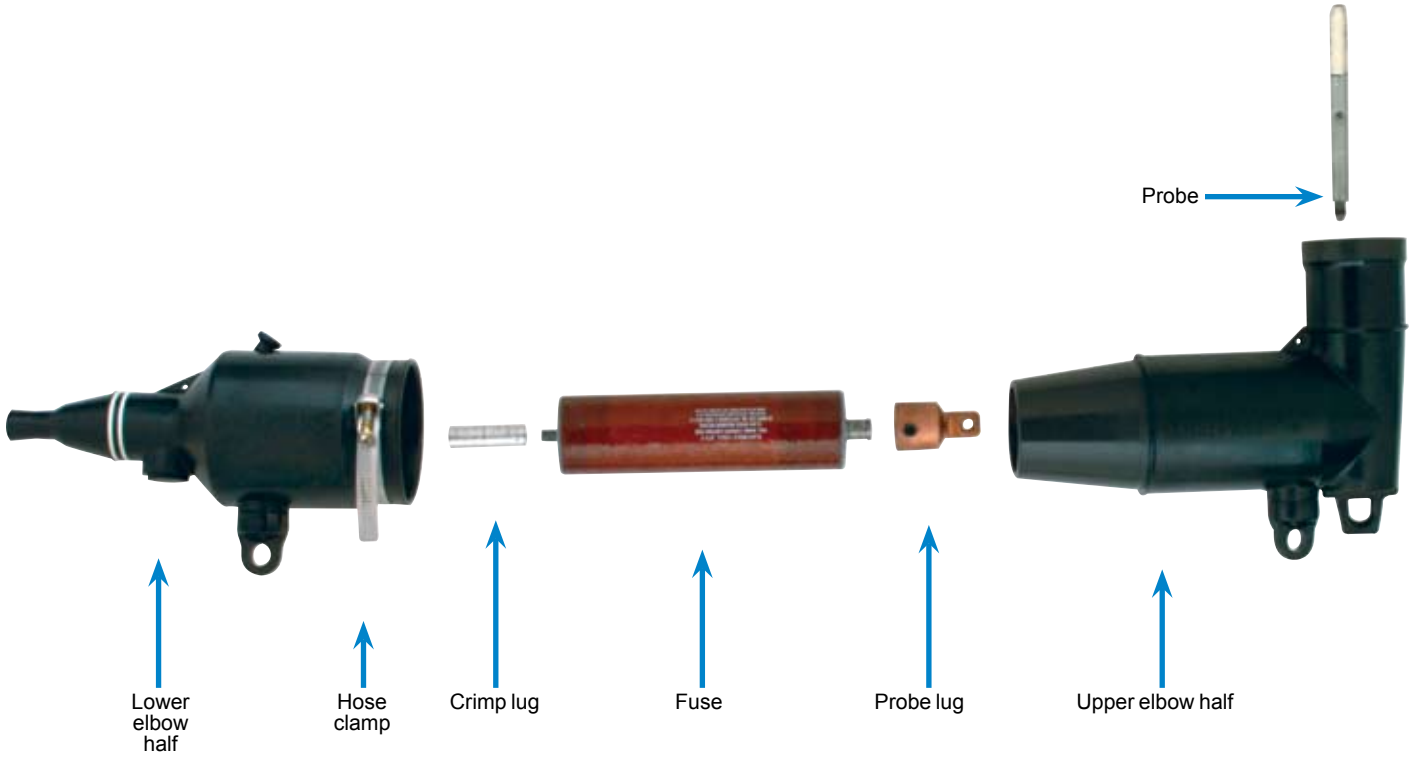

ELECTRICAL CHARACTERISTICS OF EFX-ELBOW FUSES

System Voltage Class (kV)	Nominal Fuse Voltage Rating (kV)	Current Rating (A)	Fuse Catalog Number	Rated Maximum Voltage (kV)	Maximum Continuous Current (2) (6) 25° C	40°C	65°C	Peak Arc Voltage (kV) (5)	Minimum Melt I^2t (AMP^2-SEC)	Maximum Total I^2t (3) (4) (AMP^2-SEC)
15	8.3	6	EFX083006-E	10.0	9.5	9.0	8.5	32	620	2,700
		8	EFX083008-E		11.5	11.0	10.5	28	800	4,000
		10	EFX083010-E		14.0	13.5	13.0	28	800	4,000
		12	EFX083012-E		19.0	18.5	17.5	26	920	8,000
		18	EFX083018-E		21.0	20.0	19.0	26	1,310	9,500
		20	EFX083020-E		26.0	25.0	24.0	26	1,620	11,000
		25	EFX083025-E		34.0	33.0	31.0	26	3,660	22,000
		30	EFX083030-E		37.5	36.5	34.5	26	5,250	30,000
		40	EFX083040-E		43.0	42.0	40.0	26	8,700	50,000
		45	EFX083045-E		49.0	47.0	45.0	26	12,800	70,000
		65	EFX083065-E	8.8	70.0	68.0	64.5	23	34,000	200,000
		80	EFX083080-E		80.0	77.5	73.5	22	51,200	280,000
25	15.5	6	EFX155006-E	15.5	8.5	8.0	7.7	52	620	3,000
		8	EFX155008-E		10.5	10.0	9.5	40	800	4,300
		10	EFX155010-E		13.0	12.5	12.0	40	800	4,300
		12	EFX155012-E		16.0	15.5	15.0	38	920	8,000
		18	EFX155018-E		20.0	19.5	18.5	38	1,620	13,000
		20	EFX155020-E		23.5	22.5	21.5	38	2,200	16,500
25/28	17.2	6	EFX172006-E	17.2	9.5	9.0	8.5	54	620	3,250
		8	EFX172008-E		11.5	11.0	10.5	46	800	4,600
		10	EFX172010-E		14.0	13.5	13.0	46	800	4,600
		12	EFX172012-E		18.0	17.5	16.5	43	920	8,500
		18	EFX172018-E		20.0	19.5	18.5	45	1,310	10,000
		20	EFX172020-E		24.0	23.0	22.0	45	1,620	12,500
		25	EFX172025-E		31.5	30.5	29.0	45	3,660	27,500
		30	EFX172030-E		35.5	34.5	32.5	45	5,250	37,500
		40	EFX172040-E		41.0	40.0	38.0	45	8,700	62,500
		45	EFX172045-E		46.0	45.0	42.5	45	12,800	87,500

Notes:

1. Designs have a 50,000 Amps rms. Symmetrical Rating.
2. Fuses have a Rated Maximum Application Temperature of 65ºC (RMAT is the maximum temperature of the air, in contact with the elbow housing, at which they have been shown to be suitable for use).
3. Tabulated Maximum Total I^2t values are for currents of 50,000 amperes at the nominal voltage of the fuse. Values for 8.3kV fuses at 10kV are approximately 30% higher. Values for 17.2kV fuses at 15.5kV are approximately 20% lower.
4. Maximum total I^2t values are reduced for currents below 50,000 A. For example, at 10,000 A, maximum total I^2t values are approximately 15% less than the published values.
5. Peak arc voltages quoted are for 50,000 A currents at the rated maximum voltage listed. Reduced currents and voltages will reduce the peak arc voltage. Consult the factory for further information.
6. Maximum continuous currents at ambient temperatures other than those listed may be determined by derating the fuses by 0.2% per degree C over 25º C. For example: At 40º C the derating would be 15 x .2 = 3%, making the maximum continuous current of a 17.2kV 25A fuse 31.5 x .97 = 30.5A.
7. Time-current characteristic curves are published at 25ºC. Reduction in the long time melting current of the fuses (approximately one hour and longer) due to higher ambient temperatures is the same as described above for “maximum continuous currents”.

Fuses

ORDERING INFORMATION FOR FUSE HOUSINGS

YYY A FLR H - WØX

NOMINAL FUSE VOLTAGE RATING

168	8.3kV
274	15.5kV
274	17.2kV

FUSE TEST PORT

A	Two Direct Test Ports
Blank	Two Capacitive Test Points

HOUSING

1	Small*
3	Large**

CABLE INSULATION DIAMETER (IN.)

A	0.575 - 0.740
B	0.635 - 0.905
C	0.805 - 1.060
D	0.890 - 1.220

CONDUCTOR SIZE

Stranded / Comp.	Solid / Compact	Size (AWG)
180	-	6
200	190	4
220	210	2
230	220	1
240	230	1/0
250	240	2/0
260	250	3/0
270	260	4/0

* Small Housing is used with 8.3kV (6-45Amp) and 15.5kV (6-20Amp) rated fuses
** Large Housing is used with 8.3kV (65 and 80Amp) and 17.2kV (6-45Amp) rated fuses

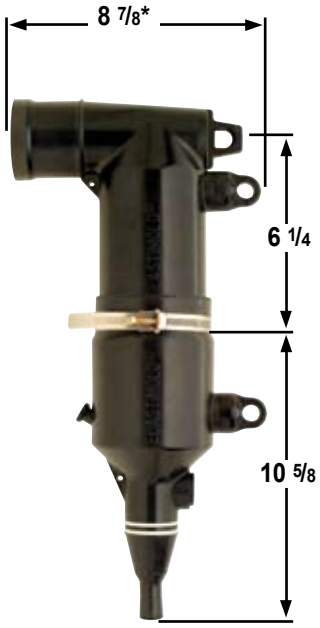

168FLR1

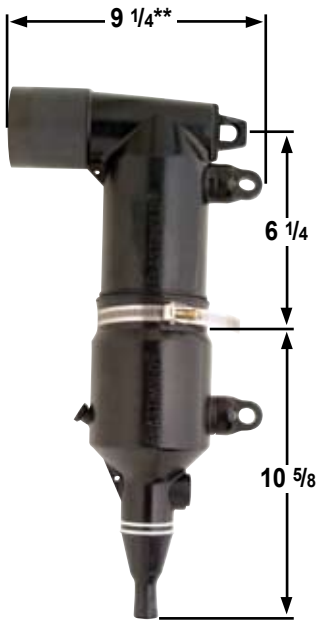

274FLR1

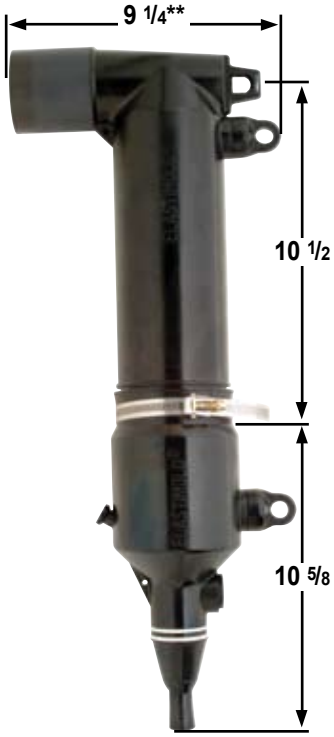

274FLR3
168FLR3

NOTES:
- All dimensions rounded up to the nearest eighth inch.
- Also available with direct test port.
- Dimensions for Direct Test Port units are * 10 1/4 or ** 10 5/8
- 168FLR3 uses a large housing with a 15kV, 200 Amp elbow interface

ORDERING INFORMATION FOR FULL-RANGE CURRENT-LIMITING FUSES

EFX YYY AAA - E

VOLTAGE RATING	
083	8.3kV
155	15.5kV
172	17.2kV

AMPERAGE RATING (A)*	
006	6
008	8
010	10
012	12
018	18
020	20
025	25
030	30
040	40
045	45
065	65
080	80

*8.3kV rated fuses are available in all Amp ratings listed
15.5kV rated fuses are available between 6-20Amps
17.2kV rated fuses are available between 6-45Amps

8.3/15.5 kV Fuse

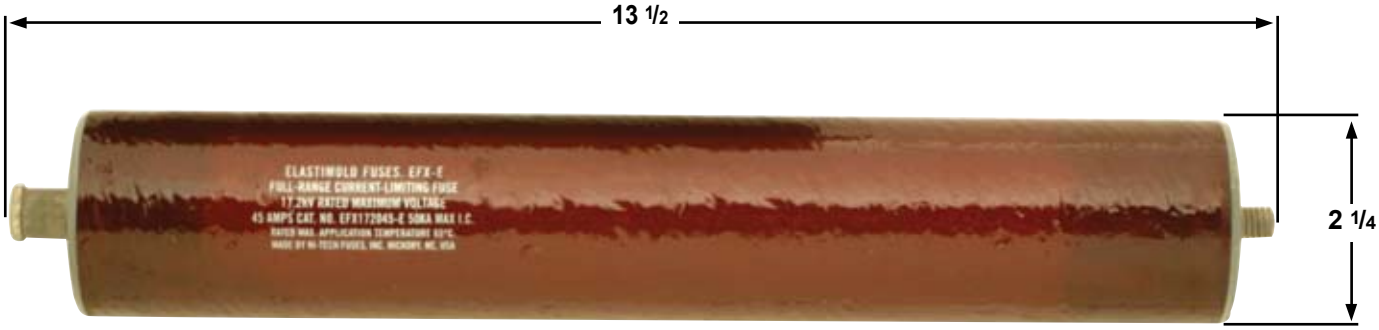

8.3/17.2kV Fuse

All dimensions rounded up to the nearest eighth inch.