PRODUCT SPECIFICATION SHEET

I T C

15kV 200A Loadbreak Elbow

166LR-W5X (w/ Test Point)

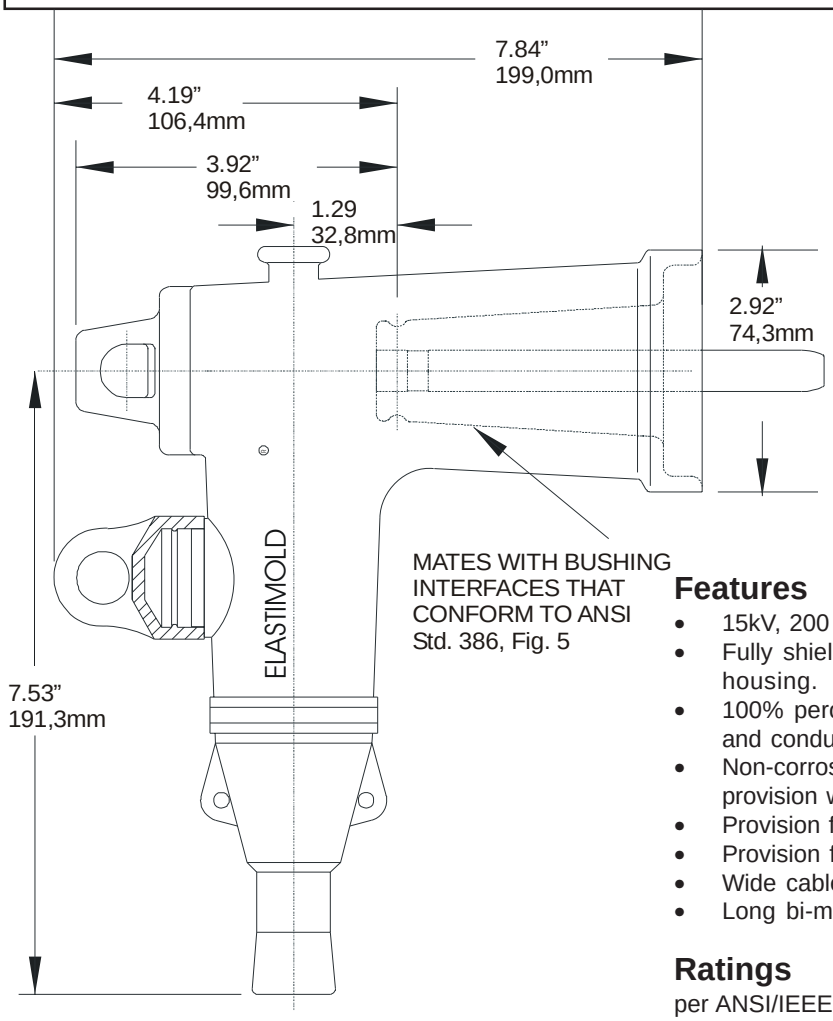

Features

- 15kV, 200 Amp Loadbreak Elbow
- Fully shielded, fully submersible molded rubber housing.
- 100% peroxide-cured construction includes insulation and conductive EPDM materials.
- Non-corrosive, capacitively coupled voltage test point provision with removable protective cap.
- Provision for hot stick operation.
- Provision for ground wire connection.
- Wide cable range with minimum number of sizes.
- Long bi-metal compression lug is standard.

Ratings

per ANSI/IEEE Standard 386
15kV Voltage Class
8.3 kV Max Phase-to-Ground - Operating Voltage
14.4kV Max Phase-to-Phase
95kV BIL - Impulse Withstand (1.2 x 50 microsecond wave)
34kV AC - One minute Withstand
53kV DC - 15 Minutes Withstand
11kV AC - Corona Extinciton @ 3p.C.sensitivity
200Amp - Continuous and Loadbreak
10kA Sym - 10 Cycles Momentary & Fault Clsoe

The Elastimold 166LR Elbow Connector is a fully rated 15kV, 200 Amp Class loadbreak connector. It includes provisions for energized operation using standard hotstick tools allowing loadmake/loadbreak operation and a visible disconnect. It has a standard interface for connecting to 15kV, 200 Amp bushing inserts, junctions and operating accessories. The 166LR are equipped with an integral capacitive voltage test point.

Applications

The 166LR is designed for connecting to and operating 15kV Class, 200 Amp distribution apparatus. It provides a convenient method to connect/disconnect cable and equipment on power distribution systems. The 166LR allows connection of cables with insulation diameters from .575" (14,6mm) to 1.220" (31,0 mm) with only four elbow sizes. (#2 solid, 175 mil to 4/0 stranded, 260 mil).

Thomas & Betts Corporation 8155 T&B Blvd. Memphis, TN 38125
Phone: (800) 888-0211 Fax: (800) 888-0690 www.tnb.com

15kV 200A Loadbreak Elbow

166LR-W5X

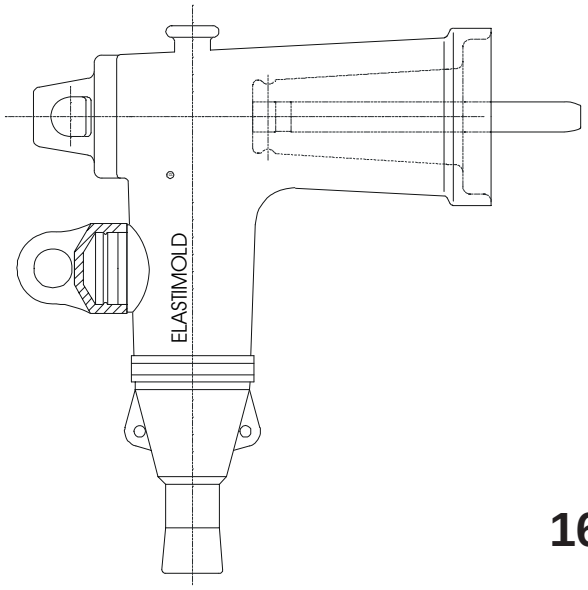

Ordering Instruction:

Step 1 (W)
Determine the insulation diameter of the cable. Select the insulation letter code that best straddles the insulation diameter. Insert code into catalog number.

Step 2 (M)
Connector material, 5 - for standard copper top bi-metal or 2 - for copper.

Step 3 (X)
Choose the proper compression lug code according to the conductor size. Insert code into the catalog number after the insulation code.

166LR – [ ] – **5*** [ ]

Step 1 (W) | Step 2 (M) | Step 3 (X)

Cable Insulation Dia. Range		Elbow
inches	mm	Code
.575 - .740	14,6 - 18,8	A
.635 - .905	16,1 - 23,0	B
.830 - 1.060	21,1 - 26,9	C
.930 - 1.220	23,6 - 31,0	D

COMPRESSION LUG			
AWG or kcmil		mm^2	Symbol
Stranded/ Compr.	Solid/ Compact	Compact Only	for "X"
4	4	16	190
3	3	22	200
--	2	25	210
2	1	35	220
1	1/0	50	230
1/0	2/0	60	240
2/0	3/0	70	250
3/0	4/0	95	260
4/0	250	125	270

*Cu or AL conductor

The Elbow Connector kit contains the following:

1 – Elbow connector housing	166BLR-W
1 – Bi-metal compression lug	02500XXX (Table R)
1 – Probe	166LRF
1 – Probe wrench	271-94
1 – Tube, lubricant	82-08
1 – Installation instruction	IS-0164 10/00
1 – Crimp chart	CC-0020

Example:
The ordering number for an Elbow Connector for a 1/0 stranded, 220 mil wall cable with an insulation diameter of .875" (22.2 mm) is 166LR-B-5240.

*For an all-copper compression lug for use on copper cable only, substitute the prefix "2" instead of "5" in the compression lug code. The ordering number would be 166LR-B-2240.

Table R

AWG or kcmil		mm^2	Symbol	Symbol
Stranded/ Compr.	Solid/ Compact	Compact Only	for Copper	for Bi-Metal
4	4	16	02702190	02500190
3	3	22	02702200	02500200
--	2	30	02702210	02500210
2	1	35	02702220	02500220
1	1/0	50	02702230	02500230
1/0	2/0	60	02702240	02500240
2/0	3/0	70	02702250	02500250
3/0	4/0	95	02702260	02500260
4/0	250	125	02702270	02500270

*Cu or Al Conductor

Thomas & Betts Corporation 8155 T&B Blvd. Memphis, TN 38125
Phone: (800) 888-0211 Fax: (800) 888-0690 www.tnb.com